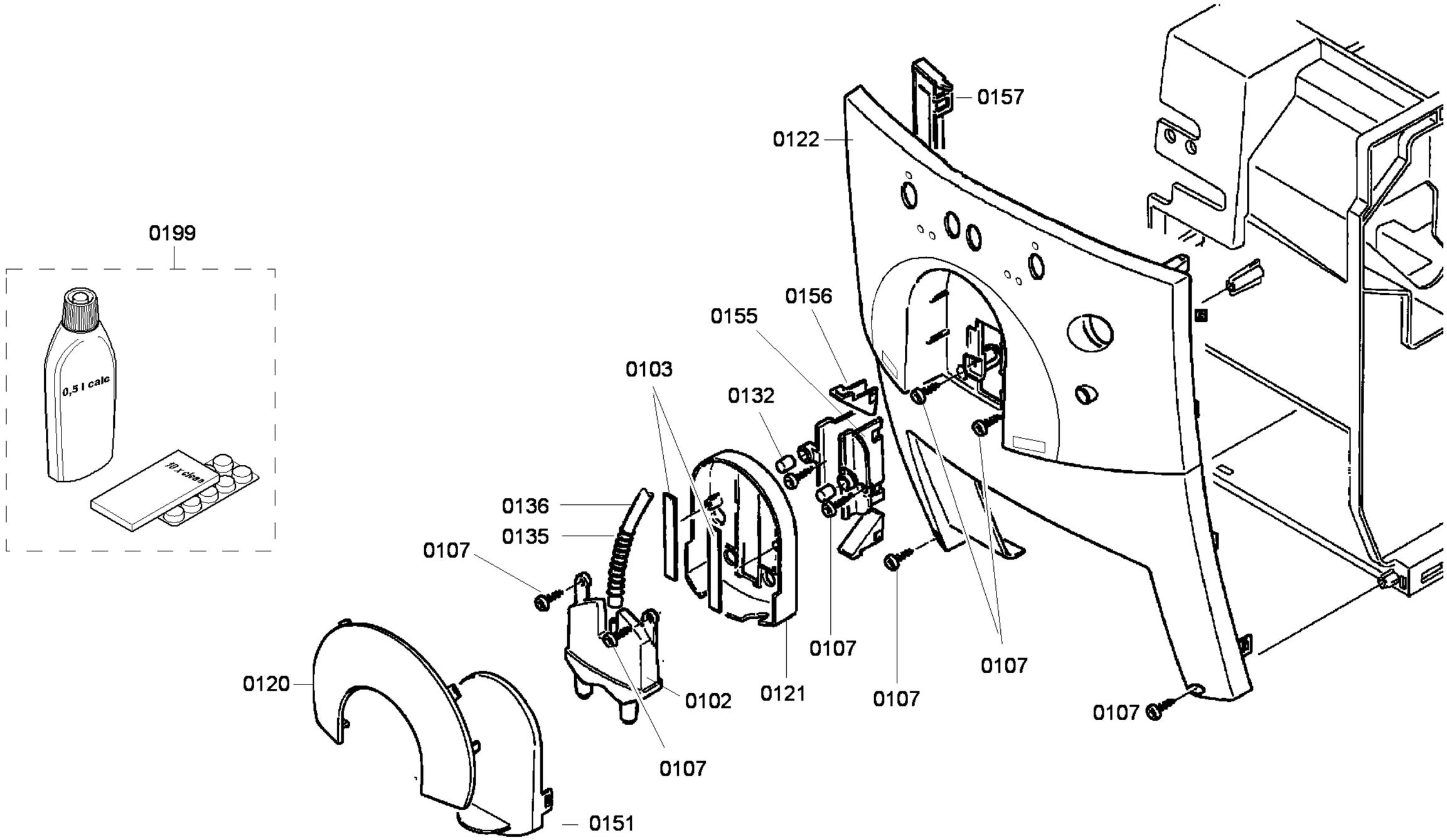

Copyright © (2016) by Bosch / SERRU_200100481_1

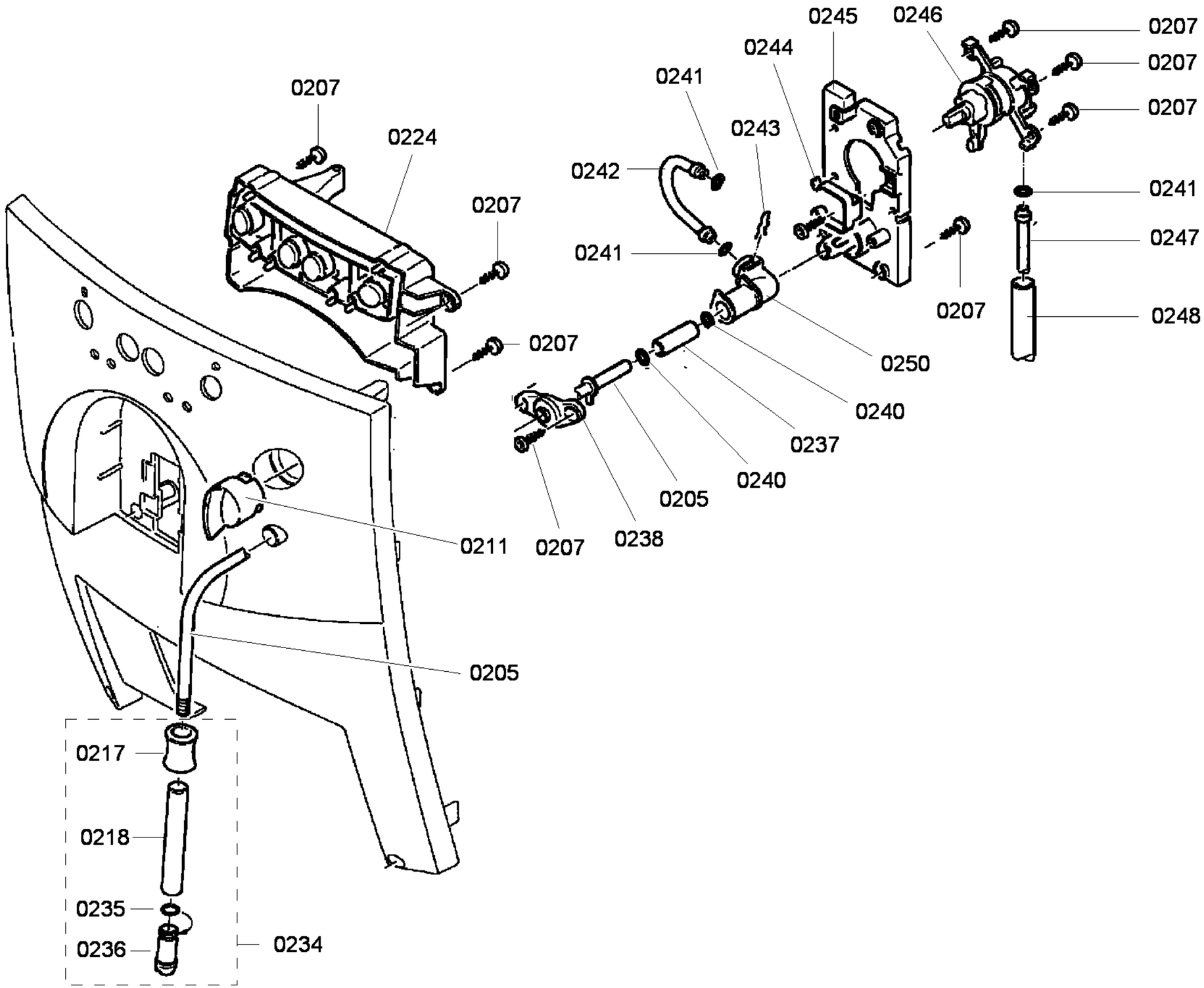

Copyright © (2016) by Bosch / SERRU_200100481_1

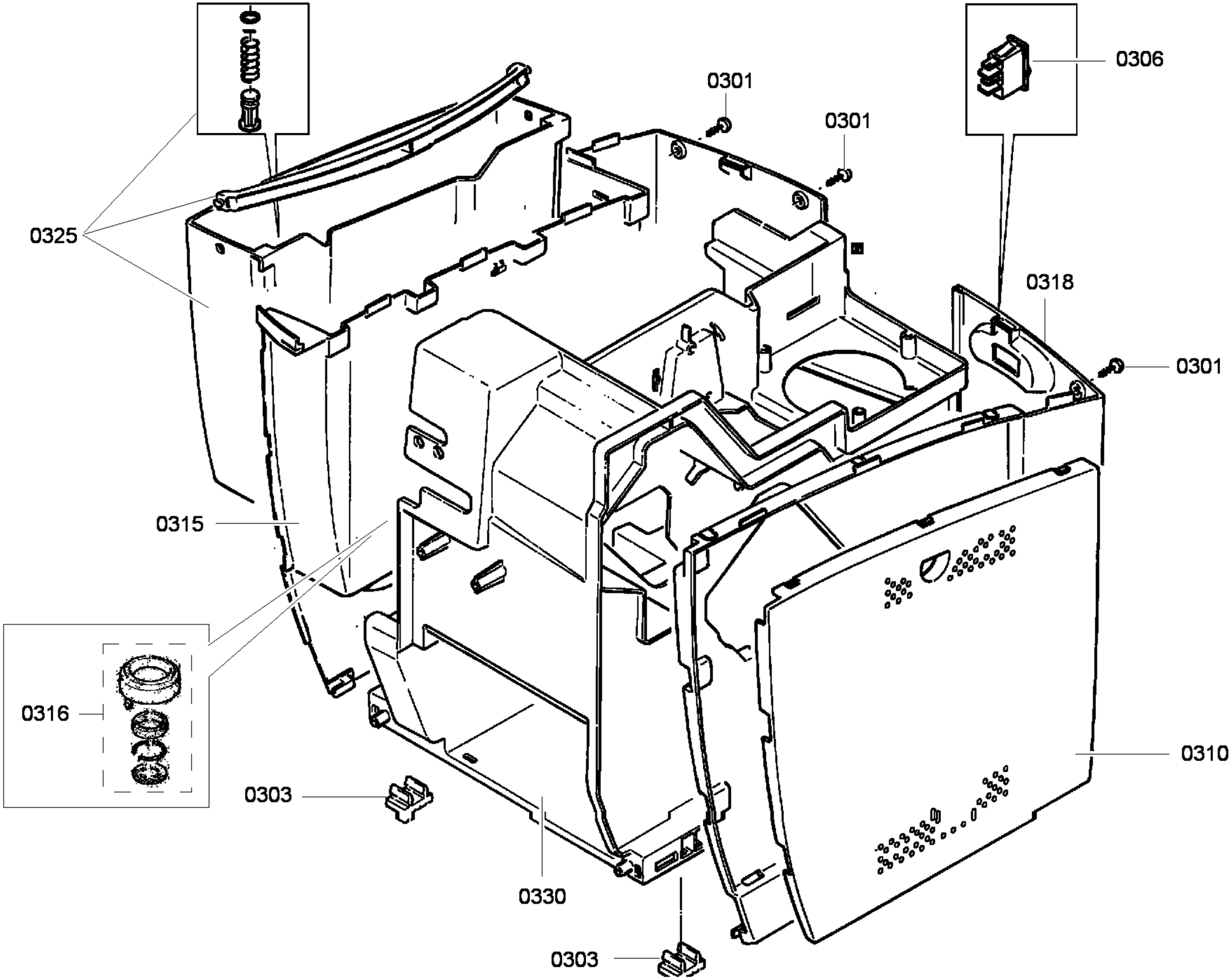

Copyright © (2016) by Bosch / SERRU_200100481_1

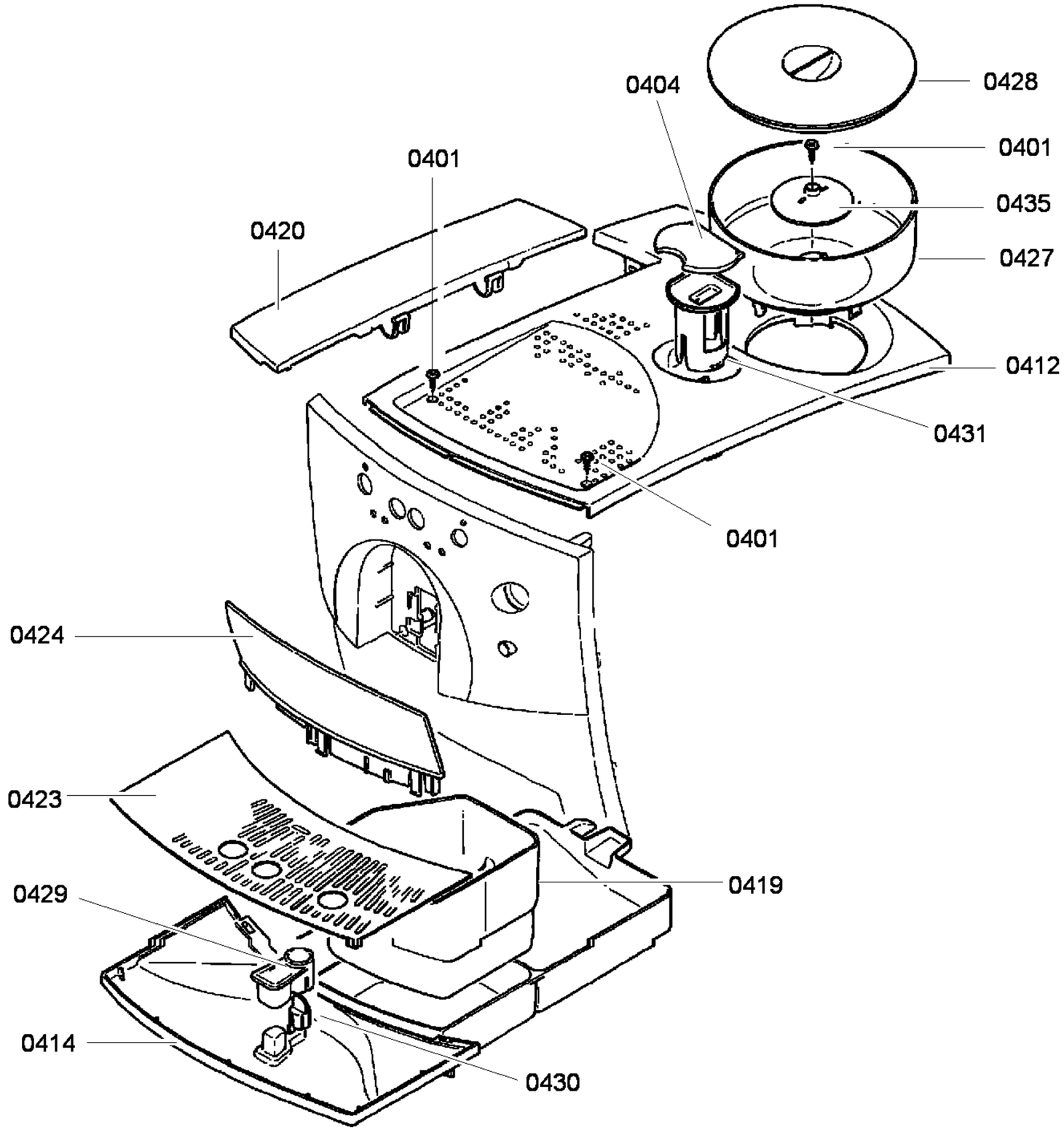

Copyright © (2016) by Bosch / SERRU_200100481_1

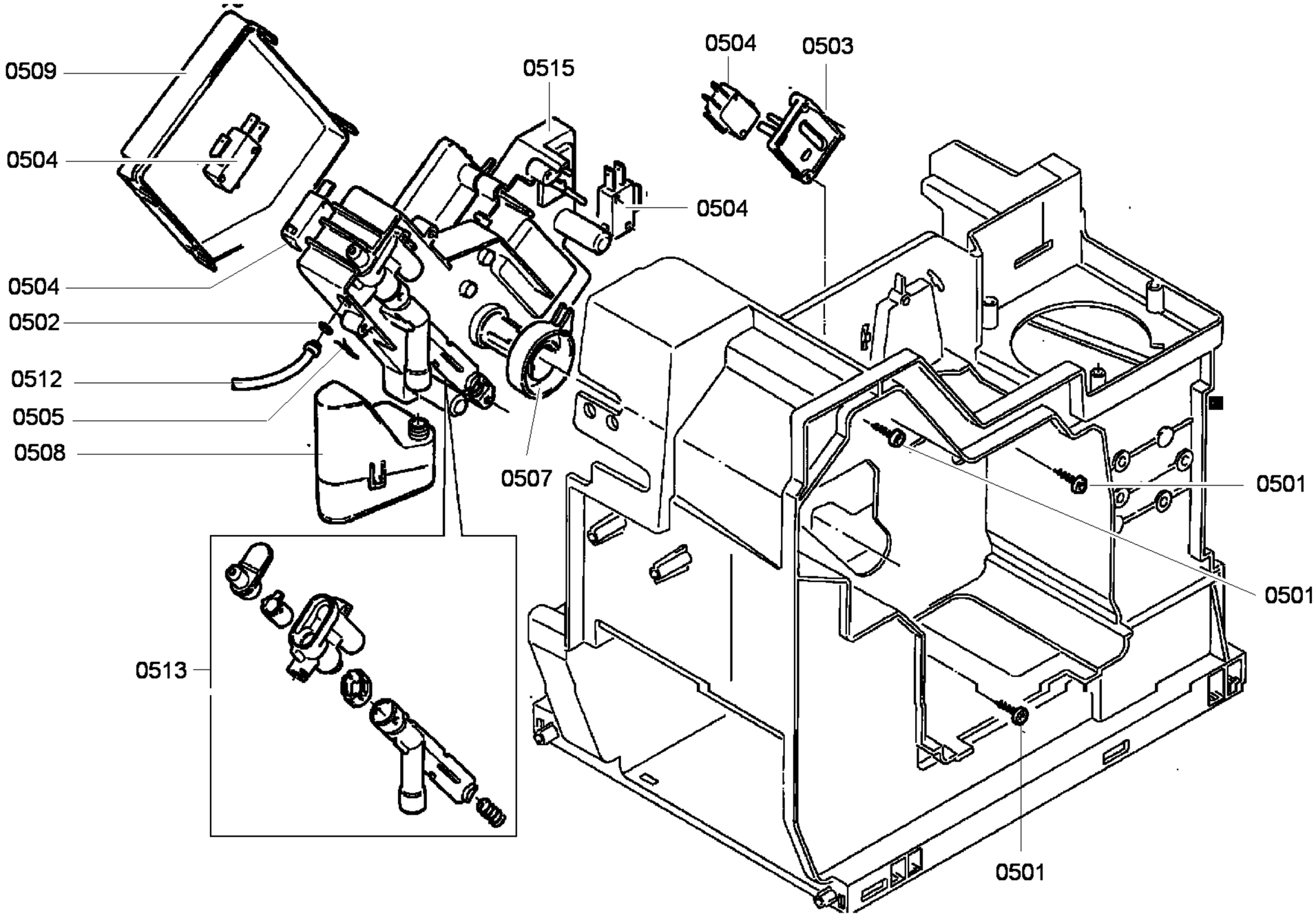

Copyright © (2016) by Bosch / SERRU_200100481_1

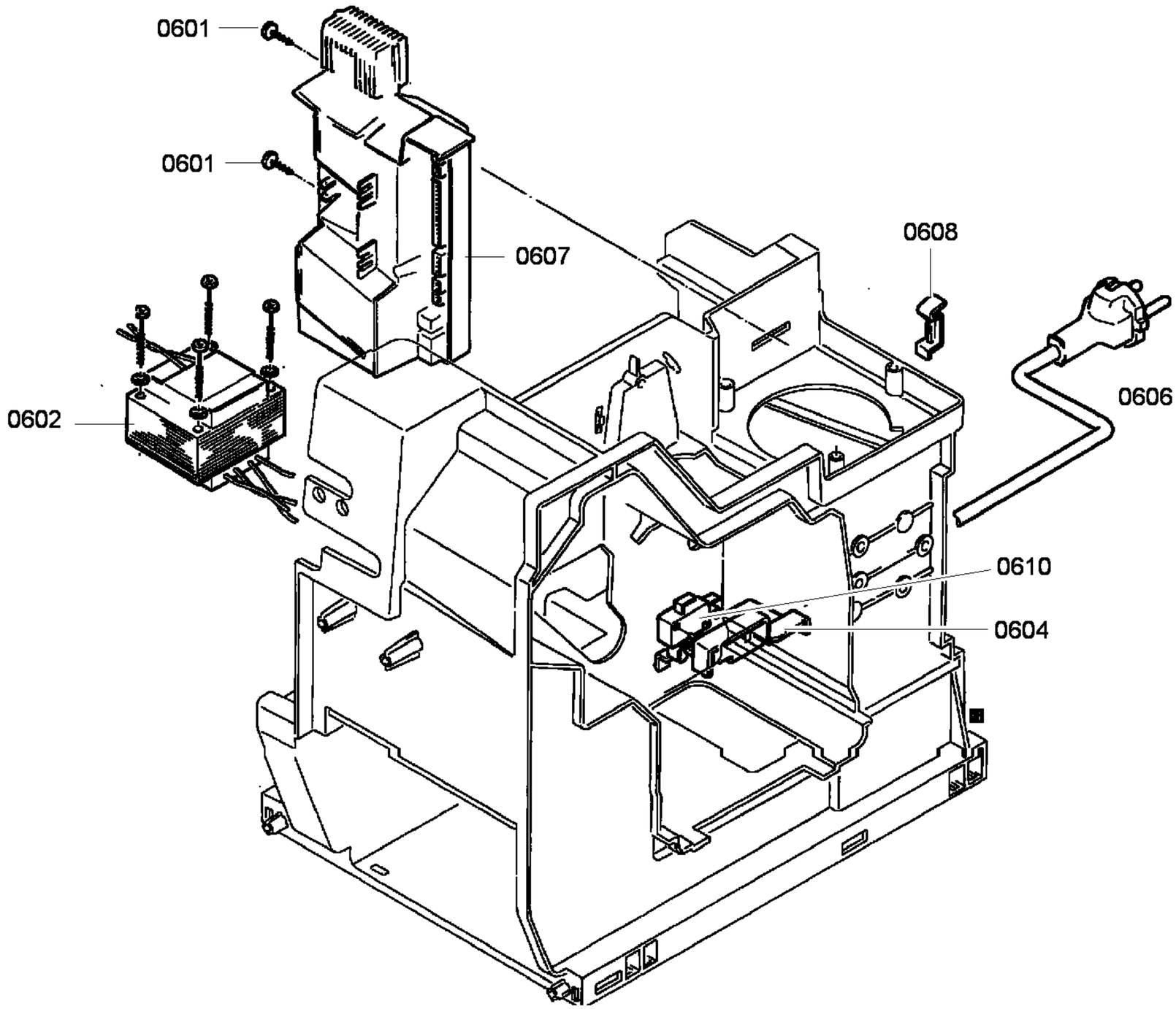

Copyright © (2016) by Bosch / SERRU_200100481_1

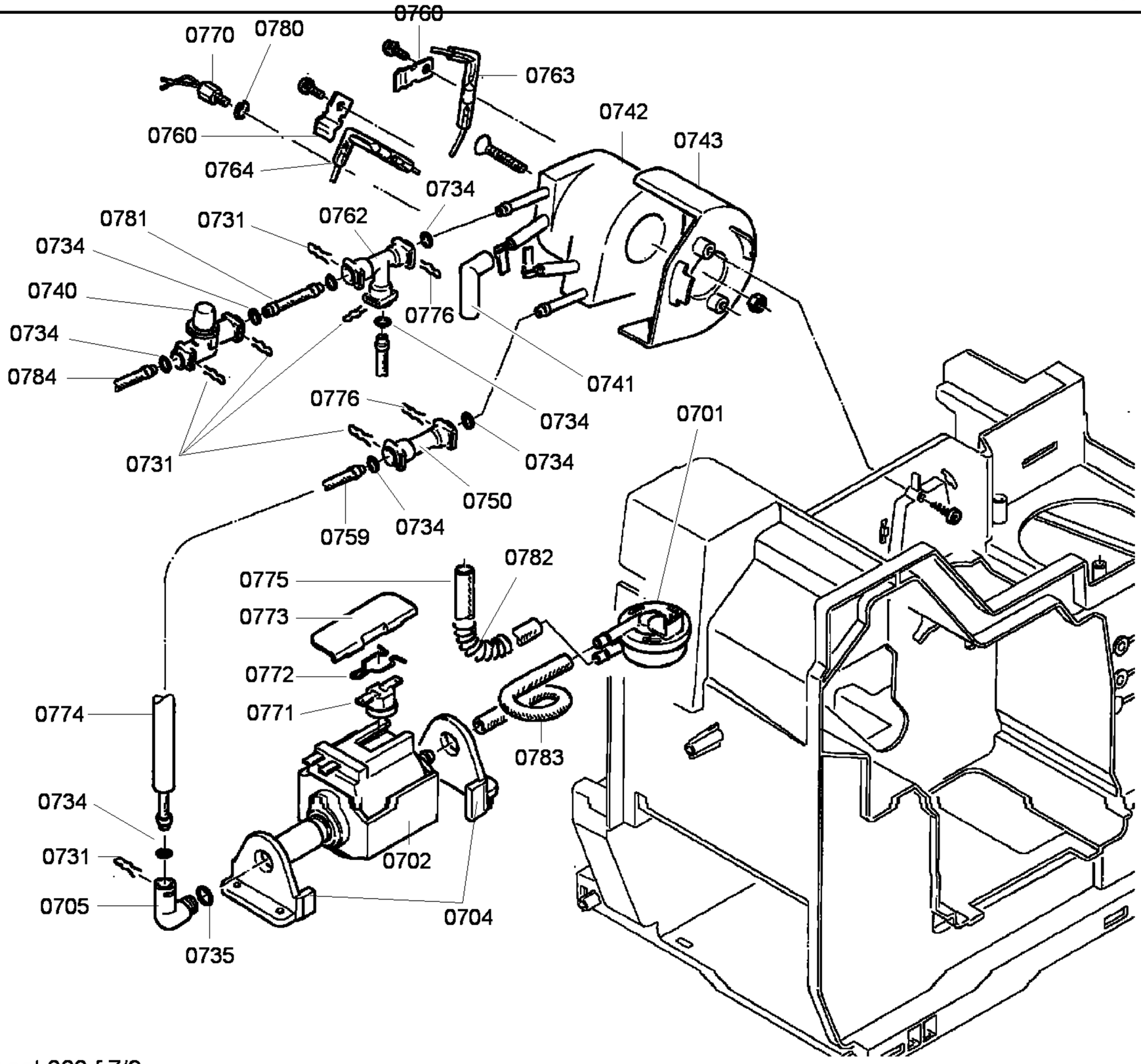

Copyright © (2016) by Bosch / SERRU_200100481_1

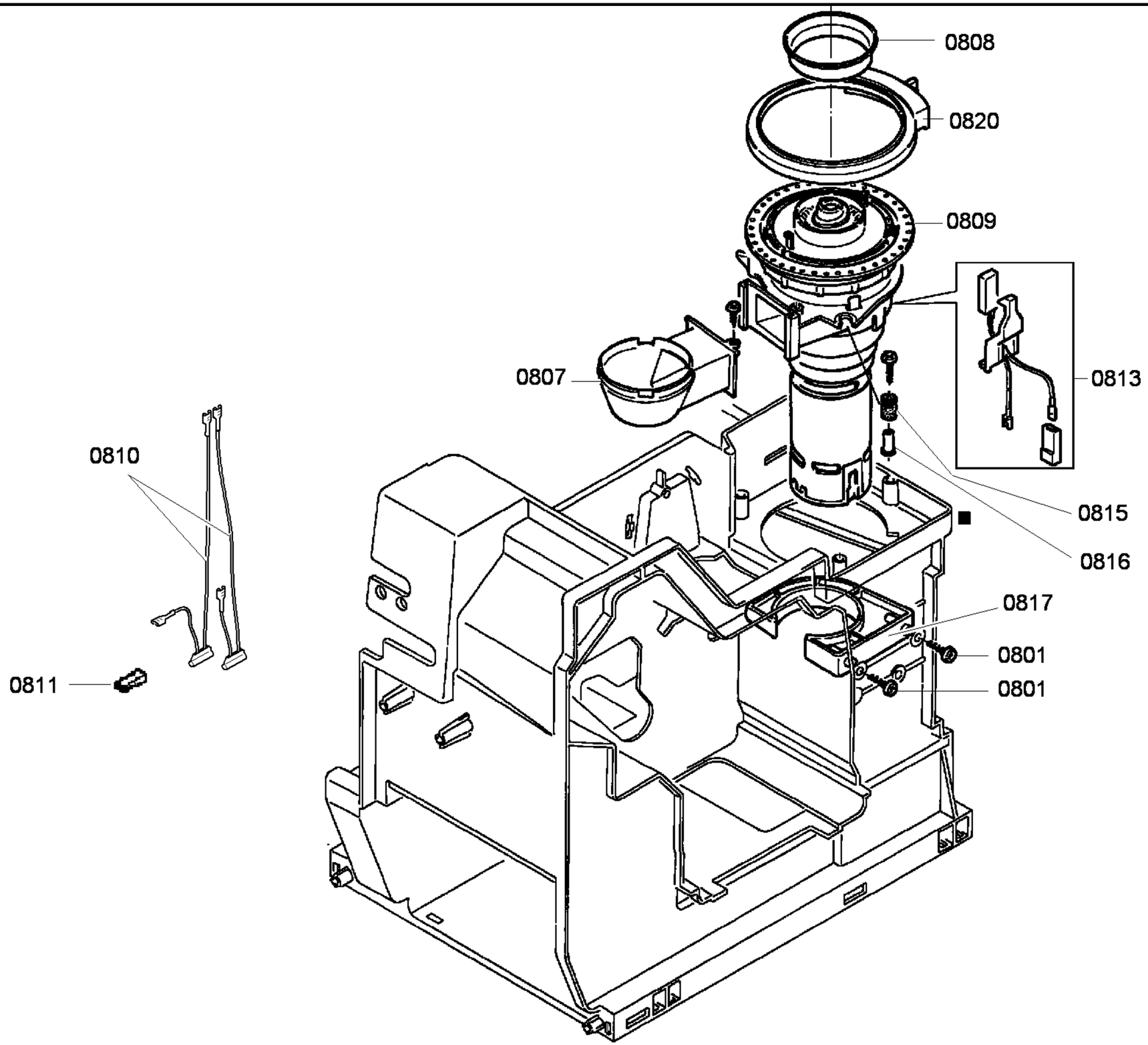

Copyright © (2016) by Bosch / SERRU_200100481_1

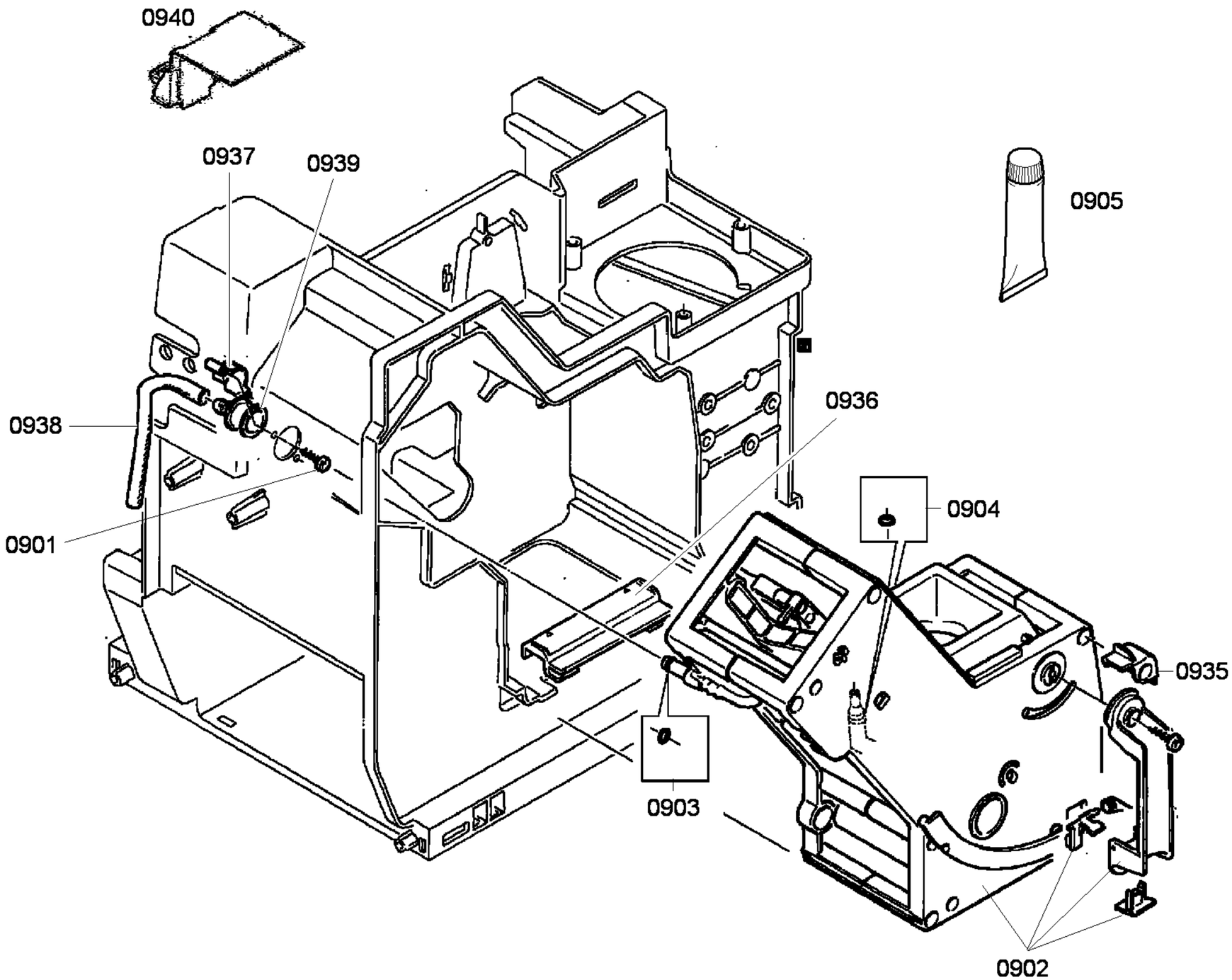

Copyright © (2016) by Bosch / SERRU_200100481_1